(A) PAYMENT FOR NO. 3 MANHOLE SHALL INCLUDE THE COST OF THE CONCENTRIC SPUR, ADDITIONAL PIPE REINFORCING, CONCRETE BACKING AND BEDDING, STEPS, RISER AND CONE SECTIONS, GRADE RINGS, AND CASTINGS. NO DEDUCTION WILL BE MADE IN THE PIPE MEASUREMENT.

(B) BEDDING SHALL BE AS SHOWN ON PLAN FOR SEWER.

(C) PRECAST MANHOLES SHALL BE COATED IN ACCORDANCE WITH 706.03 (PIPE SECTIONS) AND 706.13 (RISER SECTIONS) ON SANITARY SEWER.

(D) OPENINGS IN TEE OR RISER SECTION FOR MAIN SEWER PIPES SHALL BE PREFABRICATED WHEN THE UNIT IS CAST TO MEET PROJECT REQUIREMENTS. OPENINGS FOR INLET CONNECTIONS MAY BE PREFABRICATED OR CORED IN THE FIELD. THE PIPE MUST BE PLACED OR TRIMMED SO IT DOES NOT PROJECT INTO THE MANHOLE. NO PIPES ARE TO ENTER THE MANHOLE THRU THE STEP AREA.

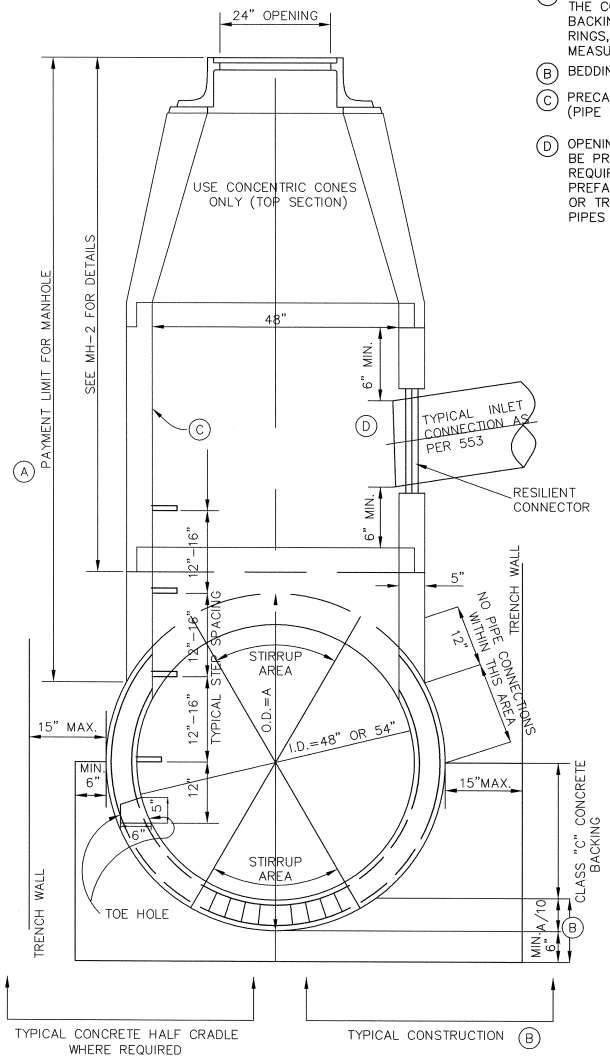

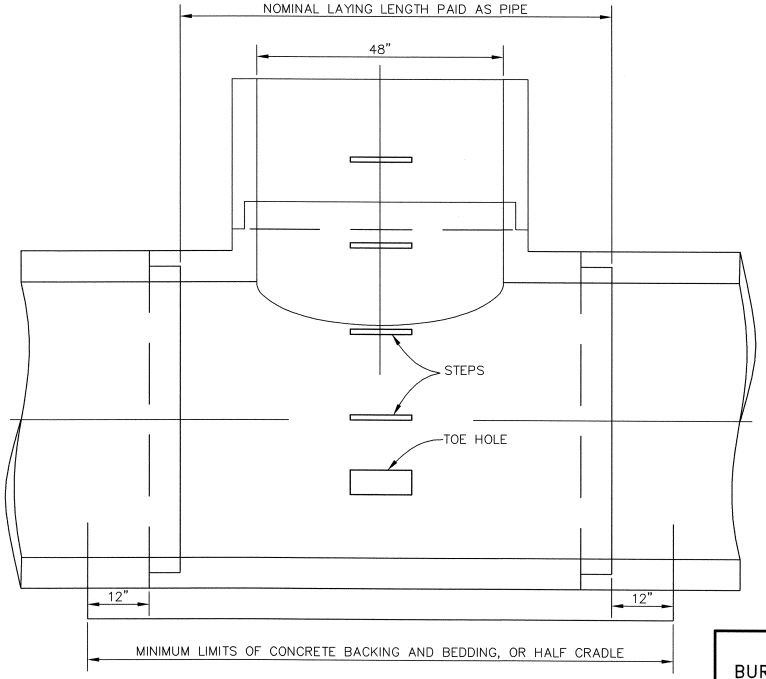

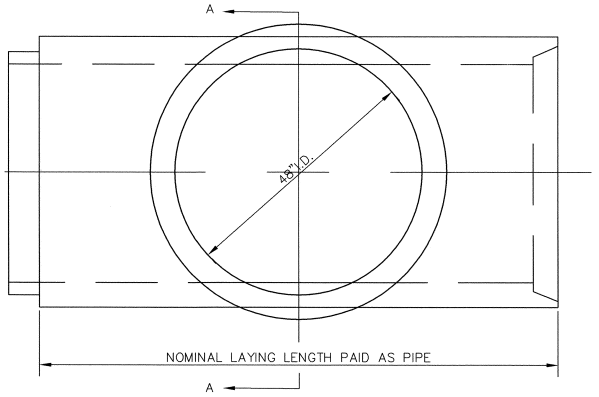

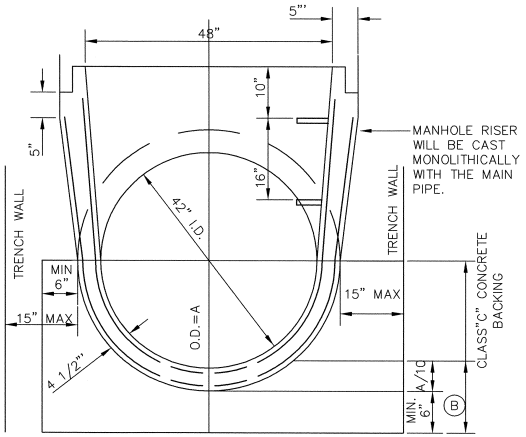

SECTION A – A
MH – 3A 42" DIAMETER

MH – 3B 48" DIAMETER
MH – 3C 54" DIAMETER

PIPE DIAMETER	MANHOLE
42"	MH–3A
48"	MH–3B
54"	MH–3C

DO NOT SCALE – USE DIMENSIONS ONLY

CITY OF AKRON BUREAU OF ENGINEERING	CONSTRUCTION STANDARD DWG. No. MH–3
Kenneth F. Kahrer 4/20/10 MANAGER, DESIGN DIVISION Gamar O. Wilder 4-20-2010 MANAGER, CONSTRUCTION DIVISION RMCH 4-20-10 CITY ENGINEER	SANITARY OR STORM SEWER 42"–54" DIAMETER REINFORCED CONCRETE PIPE WITH 48" CONCENTRIC TEE AUTOCAD DRAWING – STD_MH-3.DWG September 12, 1997 REVISIONS: DECEMBER 18, 2009 APRIL 6, 2010