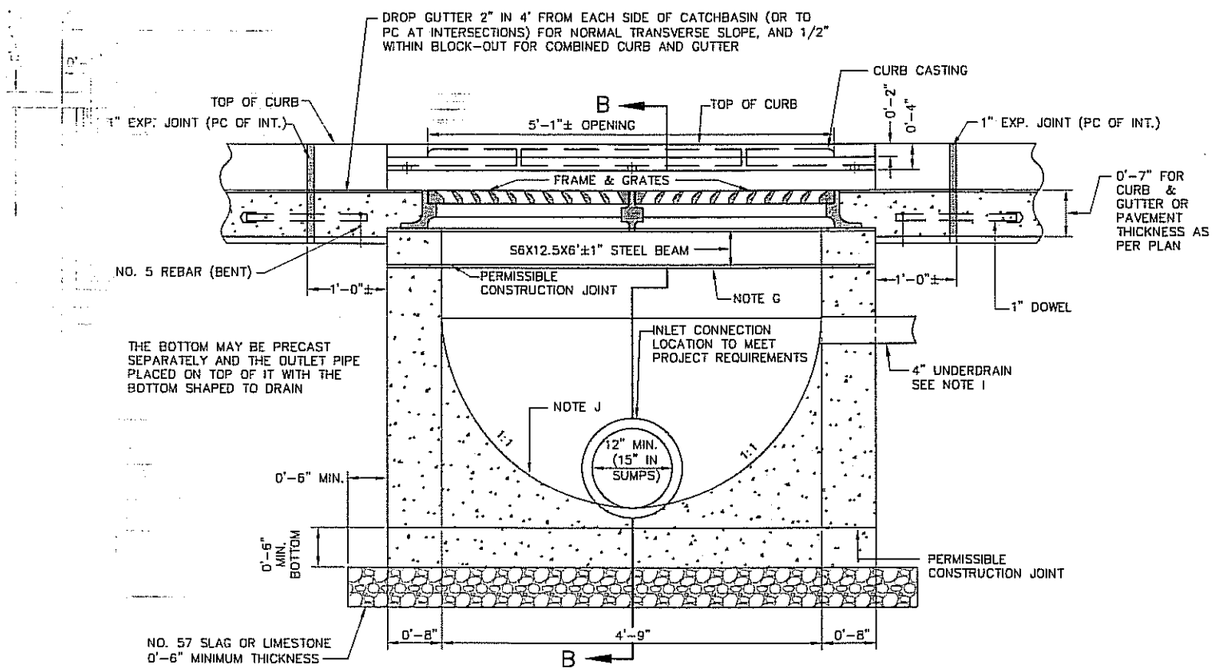

SECTION A–A

FOR GENERAL NOTES G, I, J AND K SEE DWG. No. I–5.3

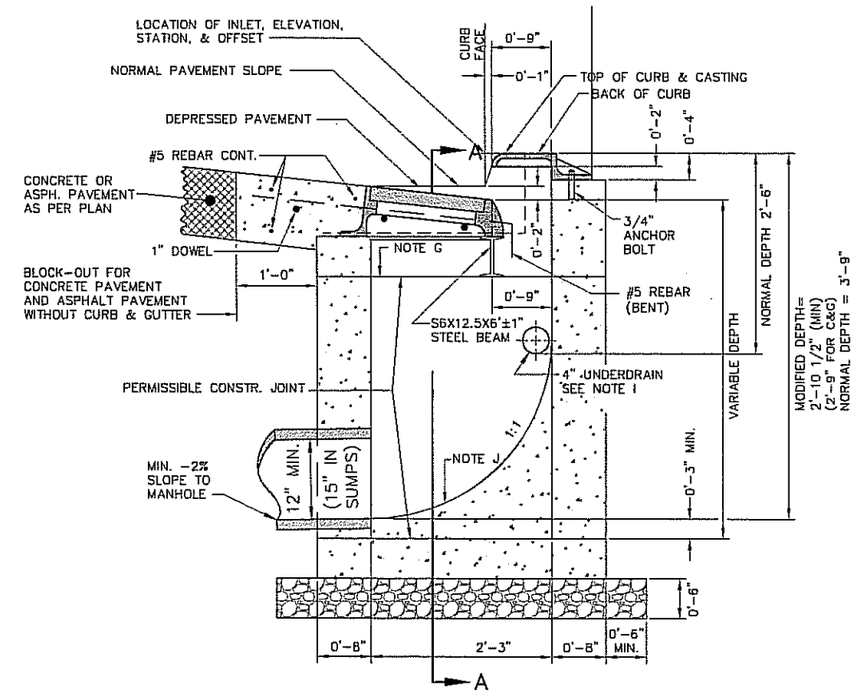

SECTION B–B
WITH CURB, 6"X18"

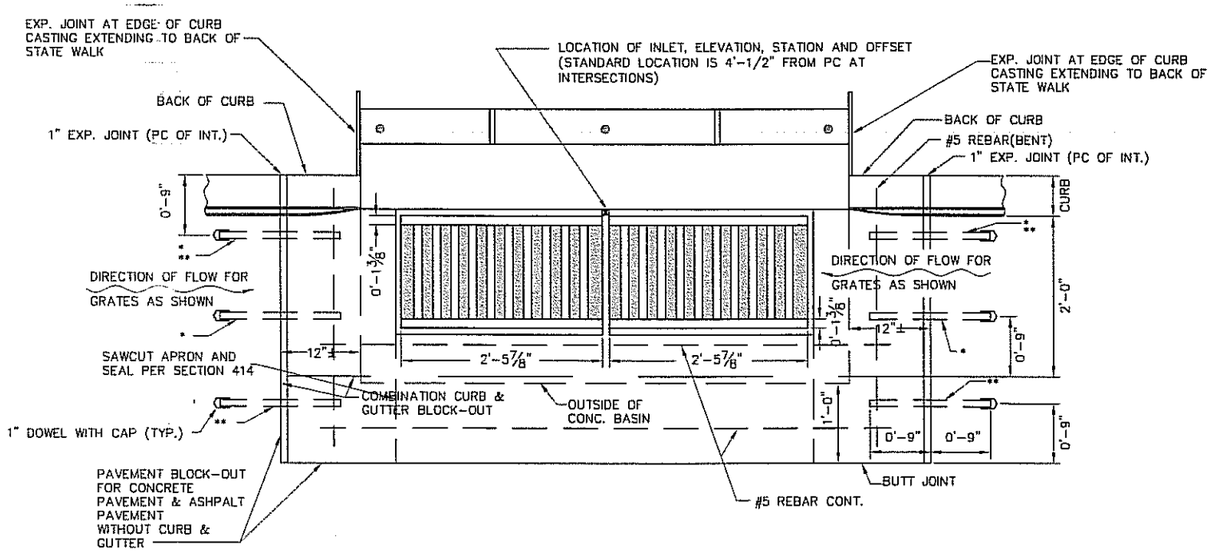

* DOWEL LOCATION FOR CURB & GUTTER
** DOWEL LOCATION FOR CONCRETE PAVEMENT

PLAN VIEW

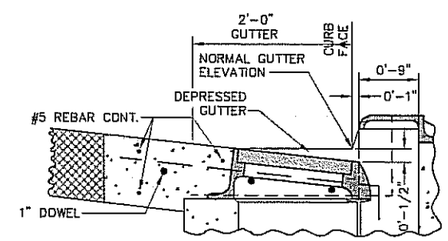

SECTION B–B
WITH CURB & GUTTER

DO NOT SCALE – USE DIMENSIONS ONLY

CITY OF AKRON BUREAU OF ENGINEERING	CONSTRUCTION STANDARD DWG. No. I–5.2
Michael L. Madonio 2/26/07 MANAGER, DESIGN DIVISION James P. Welsh 2-26-07 MANAGER, CONSTRUCTION DIVISION Daniel J. Lebik 2/26/07 CITY ENGINEER	DOUBLE NO. 5 INLET AUTOCAD DRAWING – STD_I–9.DWG JULY 9, 2003 REVISIONS: FEBRUARY 12, 2007