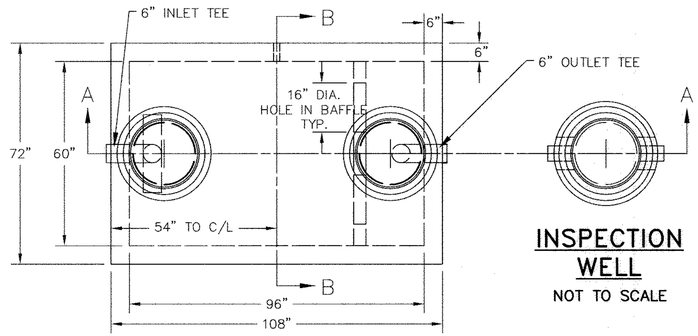

PLAN VIEW
NOT TO SCALE

INSPECTION WELL
NOT TO SCALE

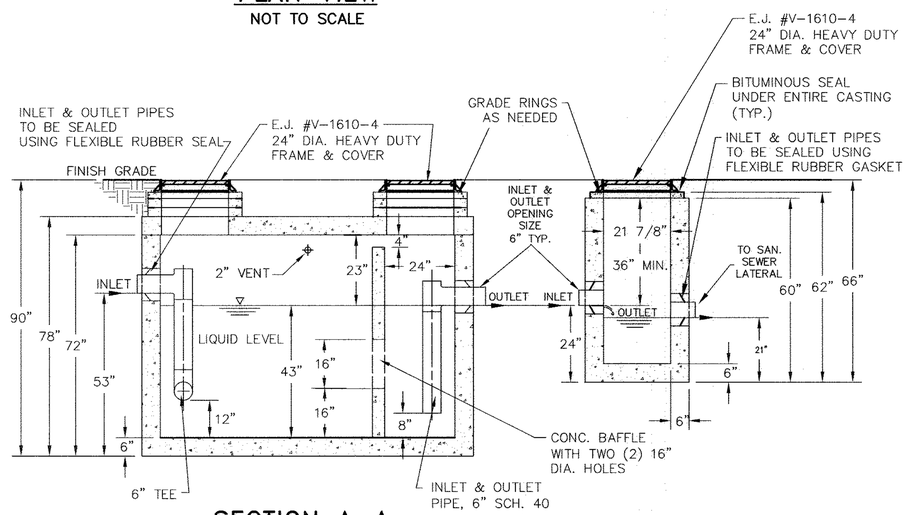

SECTION A–A
NOT TO SCALE

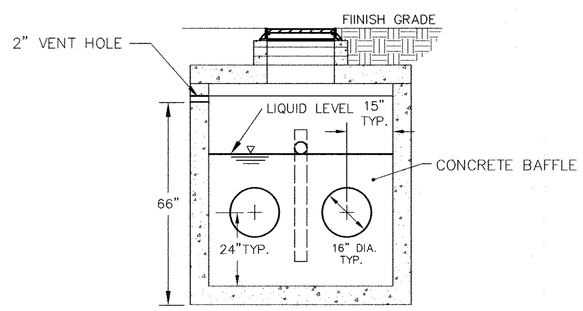

SECTION B–B
NOT TO SCALE

NOTE:

1. REINFORCED PRECAST CONCRETE SHALL HAVE A COMPRESSIVE STRENGTH OF 5000 PSI AT 28 DAYS.
2. CONSTRUCTION JOINTS TO BE SEALED WITH 1" CONSEAL CS–102 SEALANT.
3. SHALL MEET HS–20–44 OR EQUAL TRAFFIC–BEARING–LOADING.
4. THE ACCESS MANHOLES AND INSPECTION WELL SHALL BE PROVIDED WITH AN INFLOW PREVENTER AND INTERNAL CHIMNEY SEAL.
5. EACH STRUCTURE SHALL BE PLACED ON A BED OF #57 CRUSHED LIMESTONE OR WASHED GRAVEL NO LESS THAN 6" IN DEPTH ON COMPACTED SUBGRADE.
6. THE STRUCTURE WILL NOT MAINTAINED BY THE CITY OF AKRON.
7. THE STRUCTURE IS TO BE INSTALLED OUT OF THE PUBLIC RIGHT–OF–WAY.
8. TYPICAL DESIGN WILL VARY BY MANUFACTURER.
9. ANY VARIANCE FROM THIS DETAIL MUST HAVE PRIOR APPROVAL FROM THE CITY OF AKRON.

DO NOT SCALE – USE DIMENSIONS ONLY

CITY OF AKRON BUREAU OF ENGINEERING	CONSTRUCTION STANDARD DWG. No. S–8
Michael J. Teodecki 6-13-13 ACTING MANAGER, DESIGN DIVISION Daniel P. Welsh 6-18-2013 MANAGER, CONSTRUCTION DIVISION 6/18/13 ENGINEERING BUREAU MANAGER	1000 GALLON GREASE INTERCEPTOR AND INSPECTION WELL AUTOCAD DRAWING – STD. S–8.DWG JUNE 13, 2013 REVISIONS: