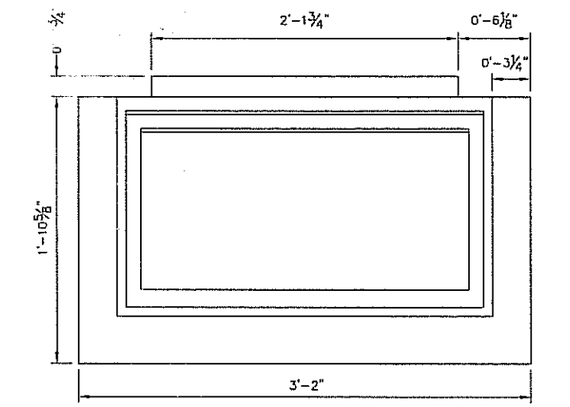

PLAN FRAME

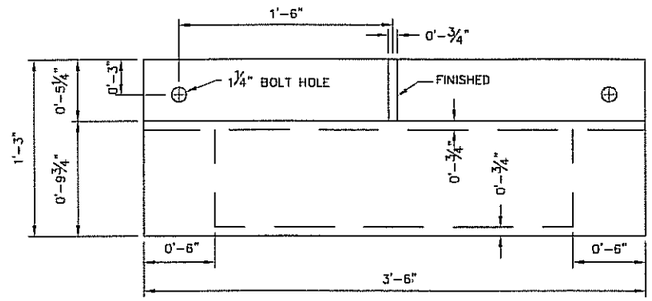

PLAN CURB CASTING

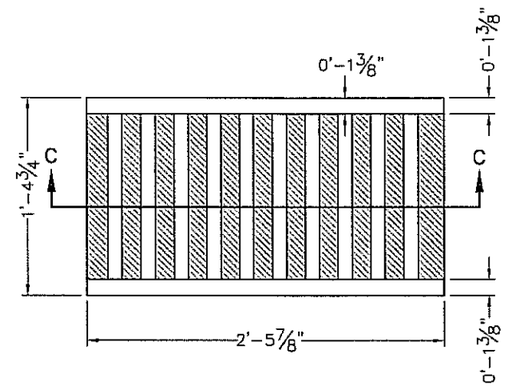

PLAN GRATE "V"

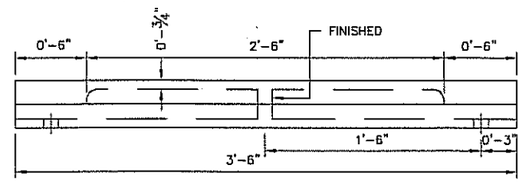

FRONT VIEW CURB CASTING

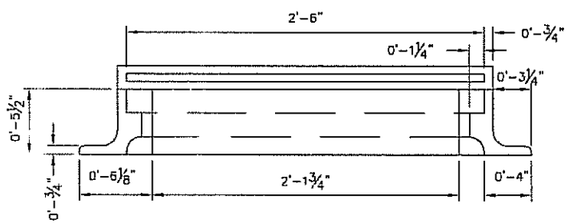

BACK VIEW FRAME

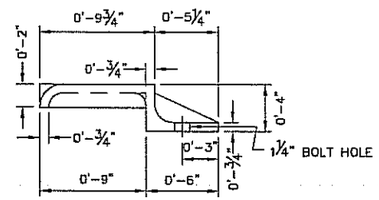

END VIEW CURB CASTING

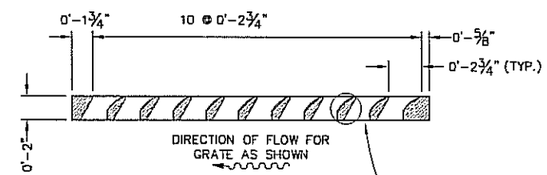

SECTION C–C

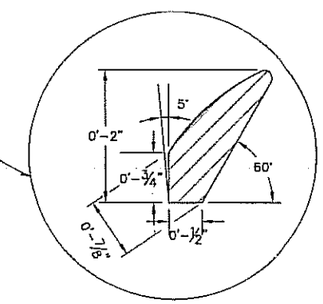

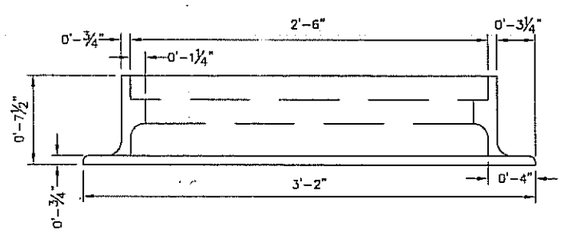

FRONT VIEW FRAME

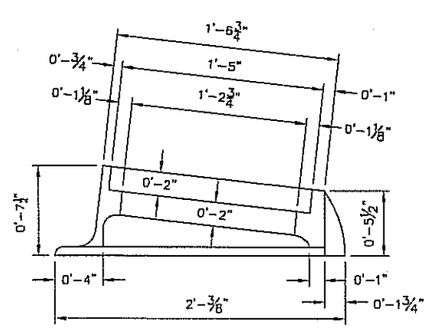

END VIEW FRAME

DO NOT SCALE – USE DIMENSIONS ONLY

CITY OF AKRON BUREAU OF ENGINEERING	CONSTRUCTION STANDARD DWG. No. I–5.1
Michael L. Madonio 2/16/07 MANAGER, DESIGN DIVISION James P. Weber 2-26-07 MANAGER, CONSTRUCTION DIVISION David Lewis 2/26/07 CITY ENGINEER	NO. 5 INLET CASTING AND GRATE AUTOCAD DRAWING – STD_I-B.DWG JUNE 25, 2003 REVISIONS: FEBRUARY 12, 2007