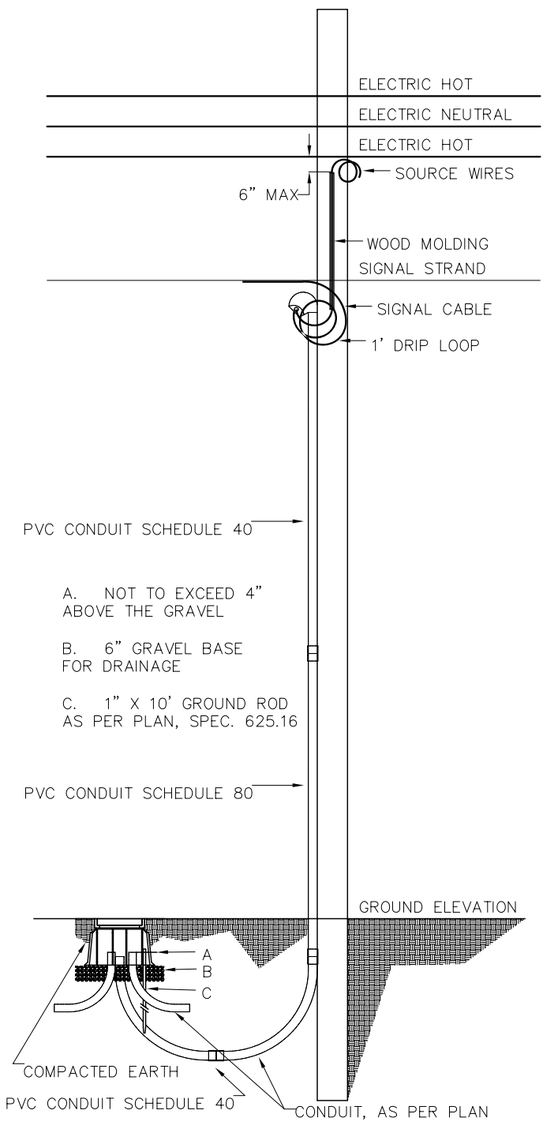

RISER DETAIL

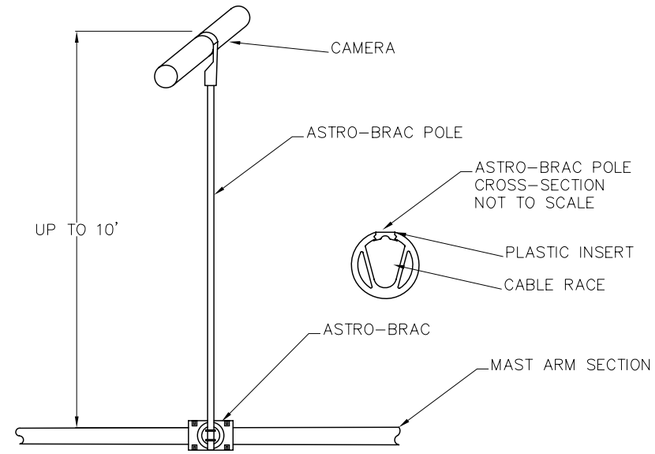

ALTERNATE MOUNTING FOR VIDEO SENSORS ON EXISTING MAST ARMS

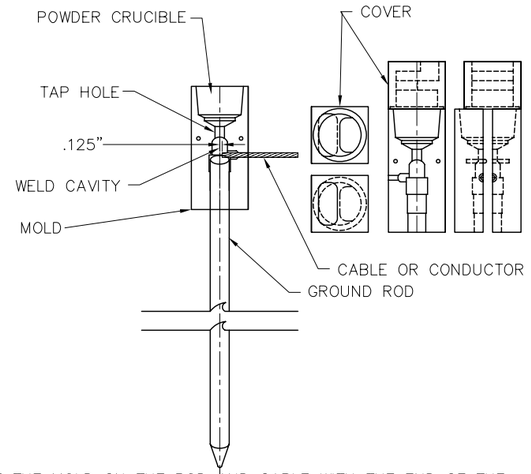

PLACE THE MOLD ON THE ROD AND CABLE WITH THE END OF THE CABLE POSITIONED .125" SHORT OF THE CENTER OF THE TAP HOLE. CABLE MUST SIT ON TOP OF THE ROD. SUPPORT THE MOLD WITH LOCKING PLIERS OR A CLAMP ON THE ROD.

CAD-WELD DETAIL

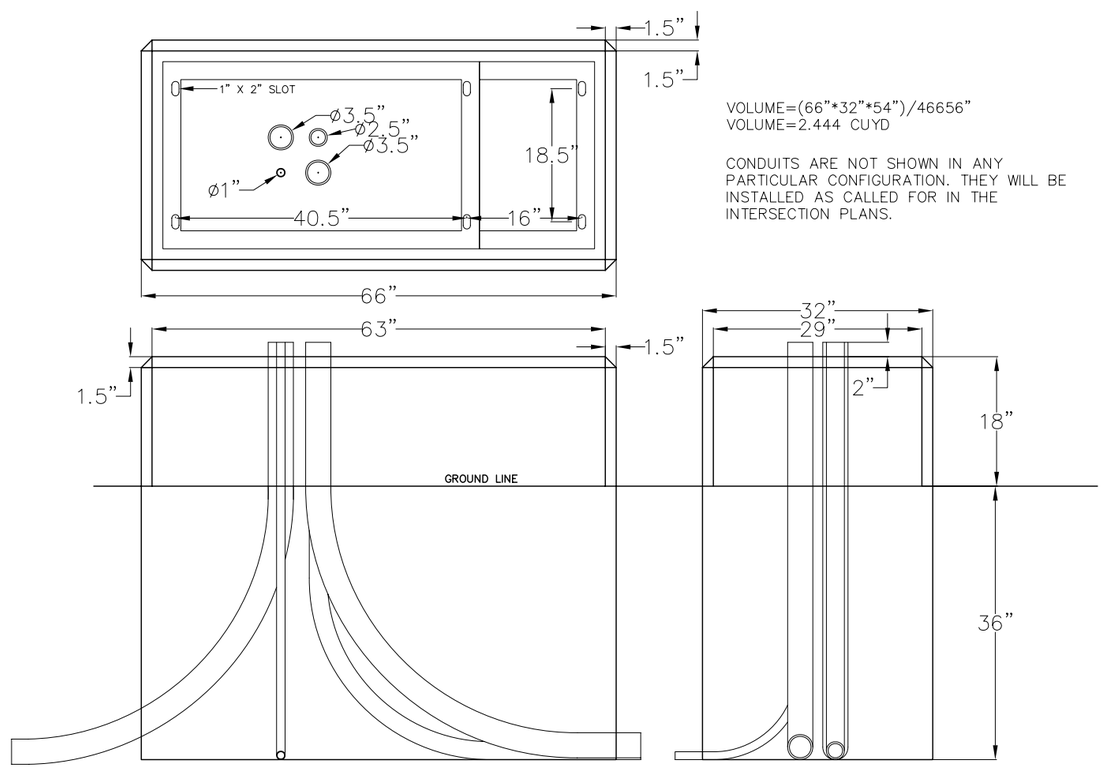

VOLUME=(66"*32"*54")/46656"
VOLUME=2.444 CUYD

CONDUITS ARE NOT SHOWN IN ANY PARTICULAR CONFIGURATION. THEY WILL BE INSTALLED AS CALLED FOR IN THE INTERSECTION PLANS.

P-44 FOUNDATION FOR CONTROL WITH UPS

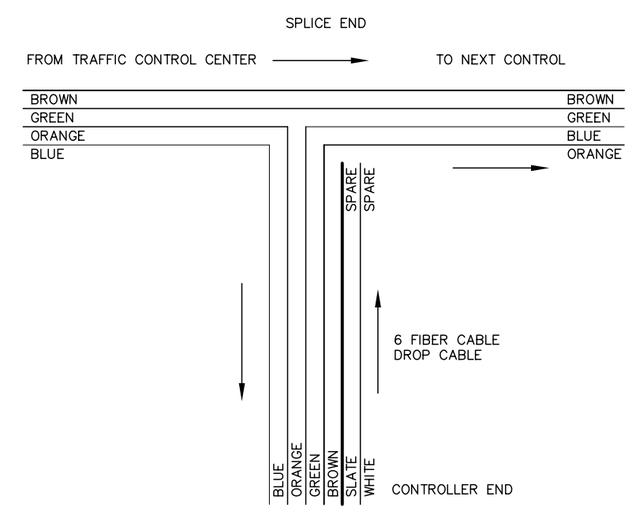

BASIC FIBER BREAK-OUT

DRAWING UPGRADE	RAC	DATE
REVISIONS		DATE

DRAWN	CHECKED	DATE
ELP	NKS	07/2005

SCALE: NO SCALE

TYPICAL FOR CAD WELD
8 PHASE AND RISER

CITY OF AKRON
TYPICALS

CITY OF AKRON
DEPARTMENT OF PUBLIC SAFETY
TRAFFIC ENGINEERING DIVISION

10
11

TYPICAL-2