BAR SCHEDULE PER 12' SPAN

FROM 6' DOWN STATION TO 6' UP STATION FROM PILE ℄

NO.-SIZE
LENGTH
DISTANCE FROM ℄ MH.

BAR	8" STRAIGHT	8" 90° TURN	10" STRAIGHT	10" 90° TURN	12" STRAIGHT	12" 90° TURN	SHAPE	POSITION
m_1	SAME AS PILE SUPPORT FOR SEWER (CONST. STD. DWG. NO. S-3 AND S-4).							
m_2	SAME AS PILE SUPPORT FOR SEWER (CONST. STD. DWG. NO. S-3 AND S-4).							
m_3	SAME AS PILE SUPPORT FOR SEWER (CONST. STD. DWG. NO. S-3 AND S-4).							
m_4	NONE	6-#8(1"ø) 9'-9 1/2" NOTE 1.	NONE	7-#8(1"ø) 9'-9 1/2" NOTE 1.	NONE	6-#8(1"ø) 9'-9 1/2" NOTE 1.	BENT	SPECIAL TIE BAR TOP & BOTTOM OF SLAB
m_{1a}	2-#8(1"ø) 8'-0" 1'-3 1/2"	4-#8(1"ø) 7'-4" 1'-3 1/2"	2-#8(1"ø) 8'-0" 1'-5"	4-#8(1"ø) 7'-4" 1'-5"	2-#8(1"ø) 8'-0" 1'-6 1/2"	4-#8(1"ø) 7'-4" 1'-6 1/2"	STR.	SPECIAL LONGITUDINAL BOTTOM OF SLAB
m_{3a}	2-#8(1"ø) 8'-0" 1'-3 1/2"	4-#8(1"ø) 7'-4" 1'-3 1/2"	2-#8(1"ø) 8'-0" 1'-5"	4-#8(1"ø) 7'-4" 1'-5"	2-#8(1"ø) 8'-0" 1'-6 1/2"	4-#8(1"ø) 7'-4" 1'-6 1/2"	STR.	SPECIAL LONGITUDINAL TOP OF SLAB
m_{1b}	2-#8(1"ø) 6'-0" 1'-11"	4-#8(1"ø) 6'-0" 1-11"	2-#8(1"ø) 6'-0" 2'-0 1/2"	4-#8(1"ø) 6'-0" 2'-0 1/2"	2-#8(1"ø) 6'-0" 2'-2"	4-#8(1"ø) 6'-0" 2'-2"	STR.	SPECIAL LONGITUDINAL BOTTOM OF SLAB
m_{3b}	2-#8(1"ø) 6'-0" 1'-11"	4-#8(1"ø) 6'-0" 1'-11"	2-#8(1"ø) 6'-0" 2'-0 1/2"	4-#8(1"ø) 6'-0" 2'-0 1/2"	2-#8(1"ø) 6'-0" 2'-2"	4-#8(1"ø) 6'-0" 2'-2"	STR.	SPECIAL LONGITUDINAL TOP OF SLAB
m_{1c}	2-#8(1"ø) 4'-0" 2'-6 1/2"	NONE	2-#8(1"ø) 4'-0" 2'-8"	NONE	2-#8(1"ø) 4'-0" 2'-9 1/2"	NONE	STR.	SPECIAL LONGITUDINAL BOTTOM OF SLAB
m_{3c}	2-#8(1"ø) 4'-0" 2'-6 1/2"	NONE	2-#8(1"ø) 4'-0" 2'-8"	NONE	2-#8(1"ø) 4'-0" 2'-9 1/2"	NONE	STR.	SPECIAL LONGITUDINAL TOP OF SLAB
p	SAME AS PILE SUPPORT FOR SEWER (CONST. STD. DWG. NO. S-3 AND S-4) EXCEPT BENT AROUND MANHOLE AS SHOWN ON PLAN.							
q	2-#5(5/8"ø) 4'-1 1/2" 6'-0"	4-#5(5/8"ø) 4'-1 1/2" SEE PLAN	2-#5(5/8"ø) 4'-7" 6'-0"	4-#5(5/8"ø) 4'-7" SEE PLAN	2-#5(5/8"ø) 5'-1" 6'-0"	4-#5(5/8"ø) 5'-1" SEE PLAN	BENT	LONG VERTICAL STIRRUPS
q_a	2-#5(5/8"ø) 5'-5 1/2" 4'-0"	2-#5(5/8"ø) 5'-5 1/2" 4'-0"	2-#5(5/8"ø) 5'-11" 4'-0"	2-#5(5/8"ø) 5'-11" 4'-0"	2-#5(5/8"ø) 6'-5" 4'-0"	2-#5(5/8"ø) 6'-5" 4'-0"	BENT	SPECIAL LONG VERTICAL STIRRUPS
q_b	NONE	NONE	NONE	NONE	NONE	NONE	BENT	SPECIAL LONG VERTICAL STIRRUPS
q_c	2-#5(5/8"ø) 7'-11 1/2" 2'-0"	NONE	2-#5(5/8"ø) 8'-5" 2'-0"	NONE	2-#5(5/8"ø) 8'-11" 2'-0"	NONE	BENT	SPECIAL LONG VERTICAL STIRRUPS
r	6-#8(1"ø) 7'-0" NOTE 2.	6-#8(1"ø) 7'-0" NOTE 2.	6-#8(1"ø) 7'-0" NOTE 2.	6-#8(1"ø) 7'-0" NOTE 2.	6-#8(1"ø) 7'-0" NOTE 2.	6-#8(1"ø) 7'-0" NOTE 2.	STR.	UPPER TRANSVERSE HORIZONTAL IN CAPITAL
s	2-#5(5/8"ø) 2'-6" 5'-0"	2-#5(5/8"ø) 2'-6" 5'-0"	2-#5(5/8"ø) 2'-9" 5'-0"	2-#5(5/8"ø) 2'-9" 5'-0"	2-#5(5/8"ø) 3'-0" 5'-0"	2-#5(5/8"ø) 3'-0" 5'-0"	BENT	SHORT VERTICAL STIRRUPS
s_a	NONE	NONE	NONE	NONE	NONE	NONE	BENT	SPECIAL SHORT VERTICAL STIRRUPS
s_b	2-#5(5/8"ø) 5'-1" 3'-0"	2-#5(5/8"ø) 5'-1" 3'-0"	2-#5(5/8"ø) 5'-4" 3'-0"	2-#5(5/8"ø) 5'-4" 3'-0"	2-#5(5/8"ø) 5'-7" 3'-0"	2-#5(5/8"ø) 5'-7" 3'-0"	BENT	SPECIAL SHORT VERTICAL STIRRUPS
t_a	3-#3(3/8"ø) 8'-7" 0'-0" & 3'-6"	3-#3(3/8"ø) 8'-7" 0'-0" & 3'-6"	3-#3(3/8"ø) 8'-7" 0'-0" & 3'-6"	3-#3(3/8"ø) 8'-7" 0'-0" & 3'-6"	3-#3(3/8"ø) 8'-7" 0'-0" & 3'-6"	3-#3(3/8"ø) 8'-7" 0'-0" & 3'-6"	BENT	VERTICAL STIRRUPS IN CAPITAL
u	8-#5(5/8"ø) 3'-11" AS SHOWN	8-#5(5/8"ø) 3'-11" AS SHOWN	8-#5(5/8"ø) 3'-11" AS SHOWN	8-#5(5/8"ø) 3'-11" AS SHOWN	8-#5(5/8"ø) 3'-11" AS SHOWN	8-#5(5/8"ø) 3'-11" AS SHOWN	BENT	PILE DOWELS
v	2-#8(1"ø) 7'-0" 1'-0 1/2"	2-#8(1"ø) 7'-0" 1'-0 1/2"	2-#8(1"ø) 7'-0" 1'-0 1/2"	2-#8(1"ø) 7'-0" 1'-0 1/2"	2-#8(1"ø) 7'-0" 1'-0 1/2"	2-#8(1"ø) 7'-0" 1'-0 1/2"	STR.	LOWER TRANSVERSE HORIZONTAL IN CAPITAL

DIMENSIONS										STRAIGHT		90° TURN		
PIPE DIA	A	B	G	H	H_a	H_b	H_c	J	K	CONCRETE CU. YD.	REIN. STL. LBS.	CONCRETE CU. YD.	REIN. STL. LBS.	PILE CAP. TONS
8"	2'-0"	1'-0"	1'-5 1/4"	1'-6"	2'-10"	4'-1"	5'-4"	2'-11 1/2"	2'-0 1/2"	5.7	698.3 ①	5.7	1051.6 ①	60
10"	2'-3"	1'-1 1/2"	1'-6 1/2"	1'-9"	3'-1"	4'-4"	5'-7"	2'-11"	1'-11 1/2"	6.0	740.5 ①	6.0	1142.3 ①	60
12"	2'-6"	1'-3"	1'-8"	2'-0"	3'-4"	4'-7"	5'-10"	2'-10 1/2"	1'-10 1/2"	6.3	717.7 ①	6.3	1048.6 ①	60

① m_1, m_2, m_3 BARS INCLUDED PER STD. DWG. S-3.

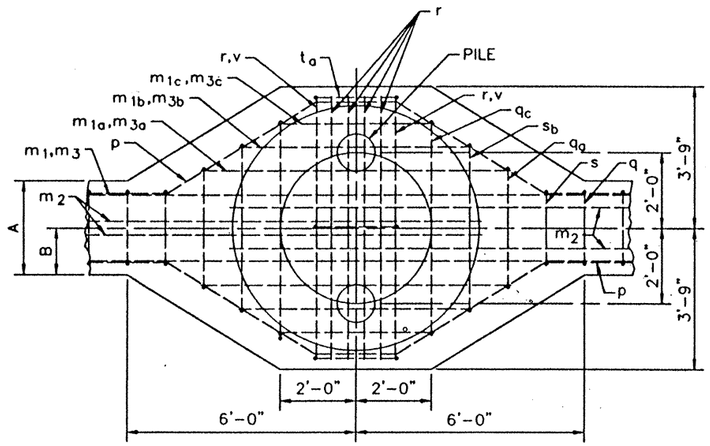

PLAN FOR STRAIGHT SEWER

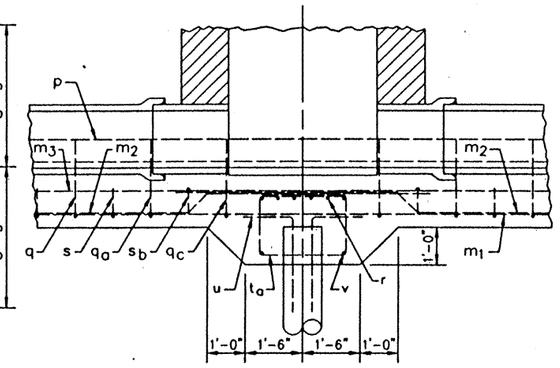

LONGITUDINAL SECTION FOR STRAIGHT SEWER

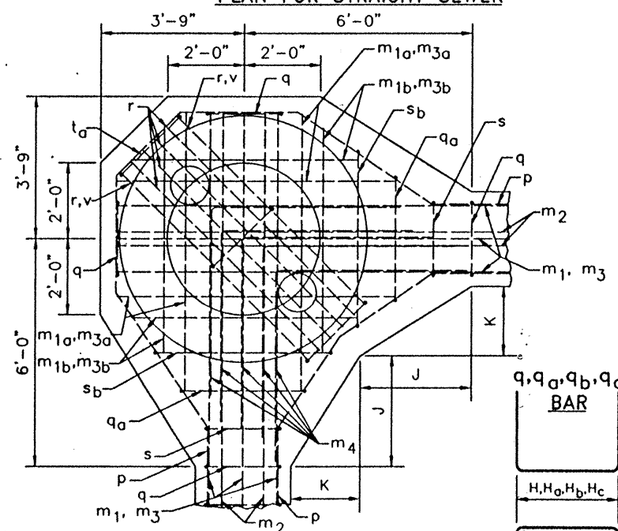

PLAN FOR SEWER WITH 90° TURN

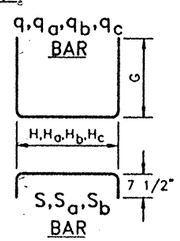

NOTES:

1. m_4 BAR IS USED TO PROVIDE A SPLICE BETWEEN m_1, m_2, AND m_3 BARS FROM ADJACENT SPANS WHICH WOULD OTHERWISE CONTINUE ACROSS THE PILE IN STRAIGHT SEWERS.
2. r BAR SPACED AT 0'-2 1/2", 0'-7 1/2", 1'-0 1/2" FROM ℄ THROUGH BOTH PILES.
3. WHEN THE DISTANCE BETWEEN PILE CENTERS IS LESS THAN 10'-0", ALL TRUSS BARS IN THE SPAN SHALL BE REPLACED WITH STRAIGHT BARS TOP AND BOTTOM, WHICH SHALL BE CONTINUED AT LEAST 3' TO 4' PAST THE PILE CENTER INTO THE ADJACENT SPAN.
4. LENGTH GIVEN IN TABLES FOR BENT BARS IS APPROXIMATELY THE LENGTH ALONG THE CENTERLINE OF THE BAR.
5. LENGTH OF LAP FOR SPLICING REINFORCEMENT SHALL BE 40 BAR DIAMETERS.
6. ALL REINFORCING STEEL SHALL HAVE A MINIMUM COVER OF 3".
7. ALL CONCRETE SHALL BE CLASS "C".
8. DIMENSIONS FOR REINFORCING BARS ARE OUT TO OUT.
9. THE MINIMUM RADIUS OF BENT BARS SHALL BE 3 BAR DIAMETERS. THE RADIUS OF A BEND IS TO THE INSIDE OF THE BAR.
10. STEEL QUANTITIES ARE FOR ESTIMATING PURPOSES ONLY. THE STEEL QUANTITY PAID SHALL BE THE ACTUAL WEIGHT OF STEEL IN PLACE.

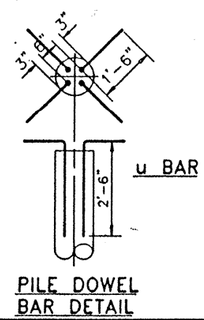

u BAR

PILE DOWEL BAR DETAIL

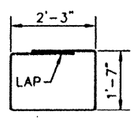

t_a BAR

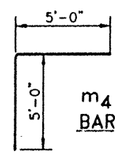

m_4 BAR

DO NOT SCALE – USE DIMENSIONS ONLY

CITY OF AKRON
BUREAU OF ENGINEERING

CONSTRUCTION STANDARD DWG. No. S-6

David Lehik 2-12-98
MANAGER, DESIGN DIVISION

Pawan K. Khaitan
MANAGER, CONSTRUCTION DIVISION

Cliford Haugh
CITY ENGINEER

PILE SUPPORT FOR MANHOLE ON 8", 10", & 12" SEWERS

AUTOCAD DRAWING – STD_S-6.DWG February 11, 1998

REVISIONS: